PRODUCED BY AN AUTODESK EDUCATIONAL PRODUCT

COLUMN SCHEDULE
GRADE OF CONCRETE - M25

6TH FLOOR TO ROOF	10-16ϕ	6-16ϕ+ 10-12ϕ	6-20ϕ+ 8-16ϕ	12-20ϕ	6-20ϕ+ 8-16ϕ	14-16ϕ	6-20ϕ+ 8-16ϕ	28-16ϕ	4-20ϕ+12-16ϕ	6-20ϕ+ 8-16ϕ	4-16ϕ+ 8-12ϕ	4-20ϕ+ 8-16ϕ	12-20ϕ	6-20ϕ+ 8-16ϕ	6-20ϕ+ 8-16ϕ	14-16ϕ	8-20ϕ+10-16ϕ	8-20ϕ+ 6-16ϕ	4-20ϕ+12-16ϕ	8-20ϕ+10-16ϕ	4-16ϕ+ 8-12ϕ	4-16ϕ+10-12ϕ	10-16ϕ	4-20ϕ+8-16ϕ
4TH FLOOR TO 6TH FLOOR	10-16ϕ	6-20ϕ+ 10-16ϕ	14-20ϕ	12-20ϕ	14-20ϕ	4-20ϕ+ 10-16ϕ	6-20ϕ+ 8-16ϕ	28-16ϕ	4-20ϕ+12-16ϕ	14-20ϕ	4-16ϕ+ 8-12ϕ	12-20ϕ	12-20ϕ	14-20ϕ	14-20ϕ	14-16ϕ	8-20ϕ+10-16ϕ	8-20ϕ+ 6-16ϕ	4-20ϕ+12-16ϕ	8-20ϕ+10-16ϕ	12-16ϕ	4-16ϕ+10-12ϕ	10-16ϕ	4-20ϕ+8-16ϕ
2ND FLOOR TO 4TH FLOOR	6-20ϕ+ 4-16ϕ	6-20ϕ+ 10-20ϕ	4-25ϕ+ 10-20ϕ	12-25ϕ	4-25ϕ+ 10-20ϕ	14-20ϕ	14-20ϕ	12-20ϕ+16-16ϕ	4-20ϕ+12-16ϕ	6-25ϕ+ 8-20ϕ	4-20ϕ+ 8-16ϕ	4-25ϕ+ 8-20ϕ	12-25ϕ	6-25ϕ+ 8-20ϕ	6-25ϕ+ 8-20ϕ	14-16ϕ	8-20ϕ+10-16ϕ	8-20ϕ+ 6-16ϕ	4-20ϕ+12-16ϕ	8-20ϕ+10-16ϕ	12-20ϕ	4-20ϕ+10-16ϕ	4-20ϕ+6-16ϕ	12-20ϕ
FOUNDATION 2ND FL. LVL	10-20ϕ	6-25ϕ+ 10-20ϕ	14-25ϕ	12-25ϕ	14-25ϕ	14-25ϕ	14-20ϕ	28-20ϕ	16-20ϕ	14-25ϕ	12-20ϕ	12-25ϕ	12-25ϕ	14-25ϕ	14-25ϕ	14-16ϕ	18-20ϕ	14-20ϕ	16-20ϕ	18-20ϕ	12-20ϕ	14-20ϕ	10-20ϕ	12-20ϕ
COL SIZE	300X450	600X300	600X300	600X300	600X300	600X300	700X300	1700X250	250 X 1000	975X300	600X300	250X(500+500)	600X300	775X300	750X300	600X300	1125X250	850X250	1000X250	1100X250	600X300	600X300	600X300	600X300
LINK	8ϕ@100C/C & 8ϕ150C/C																							
COL MARKED	C1	C2	C3	C4	C5	C6	C7	C8	C9	C10	C11	C12	C13	C14	C15	C16	C17	C18	C19	C20	C21	C22	C23	C24

PILE SCHEDULE
MIN CEMENT CONTENT IN CONCRETE SHALL BE = 400Kg /m^3

TYPE	DIA OF PILE	REINFORCEMENT	CAPACITY
	450	6-12ϕ	55.0T

PILE CAP SCHEDULE
GRADE OF CONCRETE - M25

TYPE	SIZE	DEPTH	REINFORCEMENT IN SHORTER DIRECTION	REINFORCEMENT IN LONGER DIRECTION
P2	907x2100	900	4L-10ϕ@150C/C	20ϕ@125C/C (B) 10ϕ@125 C/C (T)
P2A	961x2100	900	4L-10ϕ@150C/C	20ϕ@125C/C (B) 10ϕ@125 C/C (T)
P2B	1155x2100	900	6L-10ϕ@150C/C	20ϕ@125C/C (B) 10ϕ@125 C/C (T)
P3	AS/DWG	900	16ϕ@100C/C (B) 10ϕ@150C/C (T)	16ϕ@100C/C (B) 10ϕ@150 C/C (T)
P3A	AS/DWG	1000	16ϕ@100C/C (B) 10ϕ@150C/C (T)	16ϕ@100C/C (B) 10ϕ@150 C/C (T)
P3B	AS/DWG	900	16ϕ@100C/C (B) 10ϕ@150C/C (T)	16ϕ@100C/C (B) 10ϕ@150 C/C (T)
P3C	AS/DWG	900	16ϕ@100C/C (B) 10ϕ@150C/C (T)	16ϕ@100C/C (B) 10ϕ@150 C/C (T)
P4	2100X2100	1000	16ϕ@125C/C (B) 10ϕ@150C/C (T)	16ϕ@125C/C (B) 16ϕ@150 C/C (T)
P5	2659X2659	1000	16ϕ@100C/C (B) 10ϕ@150C/C (T)	16ϕ@100C/C (B) 10ϕ@150C/C (T)
L11	AS/DWG	1500	20ϕ@150C/C (B) 12ϕ@150C/C (T)	20ϕ@150C/C (B) 12ϕ@150 C/C (T)

FOUNDATION LAYOUT

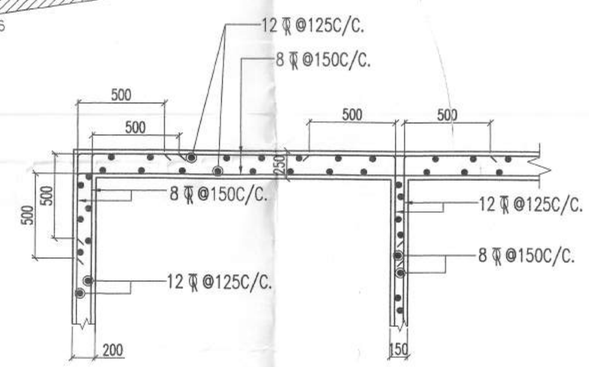

TYPICAL DETAILS OF LIFT WALL

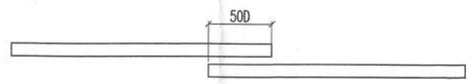

TYPICAL WELDED DETAIL

2.5 MM O ELECTROD SHALL BE USED FOR WELDING ONLY

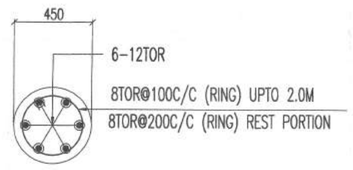

TYPICAL C/S OF PILE

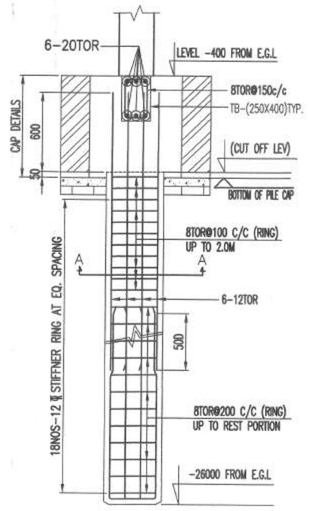

TYPICAL DETAIL OF PILE
PILE - 450 Ø

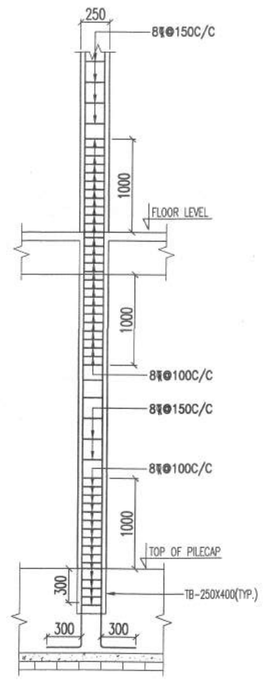

TYPICAL DETAIL OF COLUMN REINFT.

NOTES :-

1. ALL DIMENSIONS ARE IN MM. UNLESS OTHERWISE MENTIONED.
2. SUPER STRUCTURE : SUPER STRUCTURE SHALL BE OF 1ST CLASS BRICK IN 1:6 CEMENT MORTAR.
3. **ALL GRADE OF CONCRETE M25 .**
4. ALL MATERIALS SHALL CONFORM TO RELEVANT I.S CODES.
5. **FOR STEEL GRADE Fe 500 AS PER I.S 1786-2008.**
6. LAPS, SPLICES & BOND LENGTH SHOULD BE 50 D WHERE 'D' IS THE SMALLEST BAR DIA.
7. FOUNDATION & PLINTH : BRICKWORK IN FOUNDATION & PLINTH SHALL BE OF 1ST CLASSBRICK IN 1:6 CEMENT MORTAR.
8. MINIMUM CLEAR COVER TO MAIN REINFORCEMENT IS AS FOLLOWS:

MEMBER	TOP	BOTTOM	SIDE
a. FOUNDATION BEAM & SLAB	50	50	50
b. COLUMN	–	–	40
c. TIE BEAM.	30	30	30
d. FLOOR BEAM.	30	30	30
e. FLOOR SLAB.	20	20	20
e.PILE	–	–	50
f.PILECAP	50	50	50

9. THIS DRAWING IS THE PROPERTY OF M/S S.P.A CONSULTANT AND CANNOT BE COPIED OR USED WITHOUT THEIR WRITTEN PERMISSION.

CERTIFICATE OF OWNER

1. I ENGAGED ARCHITECT AND E.S.E DURING CONSTRUCTION
2. I FOLLOWED THE INSTRUCTIONS OF ARCHITECT AND E.S.E DURING CONSTRUCTION OF THE BUILDING.
3. K.M.C AUTHORITY WILL NOT BE RESPONSIBLE FOR STRUCTURE STABILITY OF BUILDING AND ADJOINING STRUCTURE.
4. IF ANY SUBMITTED DOCUMENT IS FOUND TO BE FAKE THE K.M.C AUTHORITY MAY REVOKE THE SANCTION PLAN.
5. THE CONSTRUCTION OF WATER RESERVOIR AND SEPTIC TANK EXECUTED UNDER THE GUIDANCE OF ARCHITECT & E.S.E

SYED ZUBAIR AHMED
CONSTITUTED ATTORNEY FOR
1) SK. ABDUL QADIR 12) KHUSI MOHAMMAD KHOKON
2) SK. ABDUL NAYIM 13) MD ABDUL CHALIM
3) RAJA KHAN 14) SK BABUR, HAFIQUE
4) SK. ABDUL SALIM 15) SAHIDUL ISLAM KOKON
5) SK. ABDUL NAYEEM 16) MEHADI MODAK
6) MOMIN RAJA KHOKON 17) MD. MERAJ HOSSAIN
7) JAHIRUL KHOKON 18) SAHIDA BEGOM HASAN
8) HASINA KHATOON 19) MAKSUDEEN BANO
9) SAKINA KHATOON 20) ARJUMAN BANO
10) ANWA KHATOON 21) ABEDO HOSSAIN
11) KANU FATEMA 22) ASHRAF HOSSAIN

SIGNATURE OF OWNER
SYED ZUBAIR AHMED
MANAGING DIRECTOR OF UNIQUEARK REALTORS PVT LTD.
CONSTITUTED ATTORNEY FOR
SK. ABDUL QADIR & 21 OTHERS,
ADDRESS:
26/1A, TILJALA ROAD, P.O.- GOBINDO KHATICK,
P.S.- KARAYA, KOLKATA - 700046.

CERTIFICATE OF STRUCTURAL ENGINEER

CERTIFIED THAT, THE STRUCTURAL DESIGN & DRAWINGS OF BOTH FOUNDATION & SUPER STRUCTURE OF THE BUILDING HAS BEEN MADE BY ME CONSIDERING ALL POSSIBLE LOADS INCLUDING THE SEISMIC LOAD AS PER THE NATIONAL BUILDING CODE OF INDIA & CERTIFIED THAT IT IS SAFE & STABLE IN ALL RESPECTS.
SOIL INVESTIGATION REPORT HAS BEEN DONE BY GEOTEST 6A, MILAN PARK, KOLKATA-700084, SIGNED BY MR. ALOK ROY THE RECOMENDATION OF SOIL REPORT HAS BEEN CONSIDERED DURING STRUCTURAL CALCULATION.

SANJIV J. PAREKH
M.E.(STRUCT.), M.I.E. (CONST. ENG.).
R. C. E. FIE-(F-B12202-4)
E. S. E. NO. 104 (I) K. M. C.

SIGN. OF STRUCTURAL ENGINEER
SANJIV. J. PAREKH,
E.S.E. I (104),
ADDRESS:
34 RAMMOHAN DUTTA ROAD,
KOLKATA - 700020.

SANJIB GUHA
BSC, BCE, FIE-(F-115654-5)
CHARTERED ENGINEER
ENLISTED STRUCTURAL
REVIEWER 88/18 K.M.C.

SIGNATURE OF STRUCTURAL REVIEWER
SANJIV. GUHA,
E.S.R. I (88),
ADDRESS:
34 RAMMOHAN DUTTA ROAD,
KOLKATA-20.

UNDERSIGNED HAS INSPECTED THE SITE AND CARRIED OUT SOIL INVESTIGATION THEREON. IT IS CERTIFIED THAT THE EXISTING SOIL OF THE SITE IS ABLE TO CARRY THE LOAD COMING FROM THE PROPOSED CONSTRUCTION AND THE FOUNDATION SYSTEM PROPOSED HEREIN IS SAFE & STABLE IN ALL RESPECT FROM GEO-TECHNICAL POINT OF VIEW.

ALOKE ROY
Empanelled Geotechnical Engineer
Kolkata Municipal Corporation
Class-I, Reg.- G.E/I/11
6A, Milan Park,
Kolkata-700 084

SIGNATURE OF GEO-TECHNICAL ENGINEER
ALOKE ROY
EMPANELLED NO:-11/ I

CERTIFICATE OF ARCHITECT

THE L.B.A. HAS CERTIFIED ON THE PLAN ITSELF WITH FULL RESPONSIBILITY THAT THE BUILDING PLAN HAS BEEN DRAWN UP AS PER PROVISION OF K.M.C. BLDG. RULES 2009, AS AMENDED FROM TIME TO TIME AND THAT THE SITE CONDITION INCLUDING THE WIDTH OF THE ABUTTING ROAD CONFIRM WITH THE PLAN AND IT IS A BUILD ABLE SITE AND NOT A TANK OR A FILLED UP TANK.

Rajkumar Agarwal
Architect
Member of Council of
Architecture CA / 94 / 17940

SIGNATURE OF ARCHITECT
RAJ KUMAR AGARWAL
COUNCIL REGISTRATION NO. CA/94/17940
ADDRESS:
RAJ AGRAWAL & ASSOCIATES
8B, ROYD STREET (2ND FLOOR),
KOLKATA-700016.

PROJECT

PROPOSED G+VII (HT. 23.975 MT.) STORIED RESIDENTIAL BUILDING U/S 393A OF KMC ACT 1980 AND KMC BUILDING RULES 2009 AT PRE. NO.-30/1A, TILJALA ROAD. P.S.-KARAYA, WARD NO.-65 , BOROUGH:-VII. KOLKATA-700046,

TITLE

CORPORATION DRAWING FOUNDATION LAYOUT & DETAILS COLUMN SCHEDULE

ARCHITECTS
RAJ AGRAWAL & ASSOCIATES
8B, ROYD STREET,
KOLKOTA-16

STRUCTURAL ENGINEERS
S.P.A. CONSULTANTS
34, RAM MOHAN DUTTA ROAD
KOLKATA - 700020,. PH. N0 -2485-5448, 2485-5449,
E-MAIL: spa _cons@yahoo.co.in

DRAWN BY - DEBRAJ	CHECKED BY		DATE - 17.04.2019	SCALE : 1:100 , 25
JOB NO.	2019	58	RAJ.AG	30/1A TILJALA ROAD
DRG. NO.	2019/58/SPA/RAJ.AG/30/1A TILJALA ROAD /CS-01			

PRODUCED BY AN AUTODESK EDUCATIONAL PRODUCT
PRODUCED BY AN AUTODESK EDUCATIONAL PRODUCT
PRODUCED BY AN AUTODESK EDUCATIONAL PRODUCT

(57)

PARTY'S COPY

Structural plan and design calculation as submitted by the structural engineer have been kept with B.P. No. 2021900422 Date 21/5/19 for record of the Kolkata Municipal Corporation without verification No. deviation from the submitted structural plan should be made at the time of erection without submitting fresh structural plan along with design calculation and stability certificate in the prescribed form, necessary steps should be taken for the safetyof the adjoining premises public and private properties and safety of human life during construction.

EXECUTIVE ENGINEER/ASSTT.ENGINEER
BOROUGH NO. VII

Dy. Chief Engg. Deptt
Br. VII